ROSPIMATIC CL

No. 1000002298

dated: 08/18

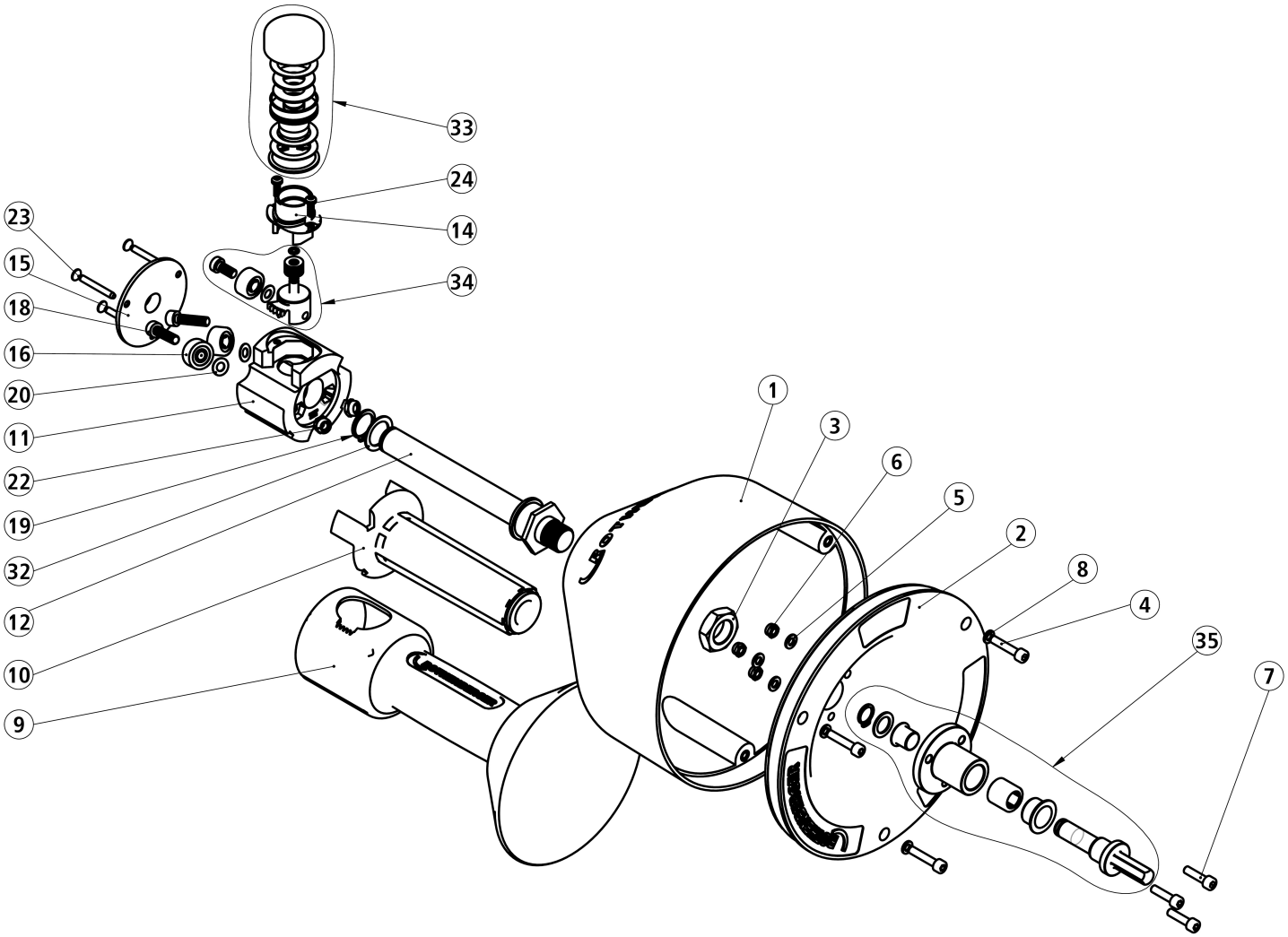

ROSPIMATIC CL

dated: 08/18

No. 1000002298

Item no.	Description	Article no.	Quantity
1	Cable container	H81814	1
2	Cable container cover	H81893	1
3	Nut	H88519	1
4	Cylinder head screw	H88161	3
5	Washer	H98955	3
6	Nut	H88518	3
7	Cylinder head screw	H80615	3
8	Sealing Washer	H97889	3
9	Control handle	F84052	1
10	Bearing complete	F84053	1
11	Roll mounting	F84051	1
12	Spiral guiding pipe	F84055	1
14	Holder	F84059	1
15	Cover for protection hose	F84061X	1
16	Caster	F84062	2
18	Cylinder head screw	F84064	2
19	Circlip	F84067	1
20	Washer	F84065	2
22	Nut	H88501	2
23	Screw	F84069	3
24	Screw	F84070	2
32	Washer	1300005000	1
33	Adjusting screw	F84020	1
34	Repair kit	F84046	1
35	Roller clutch complete	1200002436	1

IMPORTANT! To assure safety and reliability, repairs, maintencance and adjustment must be preformed by ROTHENBERGER Kelkheim or authorized Service-Centers. Always use Original-Service-Parts. Order your accessories and spare parts from your specialist retailer or using RoService+ online.

Tel. +49 6195 - 800 **8200**
Fax: +49 6195 - 800 **7491**
service@rothenberger.com