ROTHENBERGER Worldwide

Australia ROTHENBERGER Australia Pty Ltd
Unit 6, 13 Hoyle Avenue • AU-NSW 2154 Castle Hill
Tel. +61 2 / 9899 7577 • Fax +61 2 / 9899 7677
rothenberger@rothenberger.com.au
www.rothenberger.com.au

Austria ROTHENBERGER Werkzeuge- und Maschinen Handelsgesellschaft m.b.H.
Gewerbeparkstraße 9 • AT-5081 Anif near Salzburg
Tel. +43 62 46 / 7 20 91-45 • Fax +43 62 46 / 7 20 91-15
office@rothenberger.at • www.rothenberger.at

Belgium ROTHENBERGER Benelux b.v.b.a
Antwerpsesteenweg 59 • BE-2630 Aartselaar
Tel. +32 3 / 8 77 22 77 • Fax +32 3 / 8 77 03 94
info@rothenberger.be • www.rothenberger.be

Brazil ROTHENBERGER do Brasil Ltda.
Rua marinho de Carvalho, No. 72 • Vila Marina
BR-09921-005 Diadema - Sao Paulo
Tel. +55 11 / 40 44 47-48 • Fax +55 11 / 40 44 50-51
vendas@rothenberger.com.br • www.rothenberger.com.br

Bulgaria ROTHENBERGER Bulgaria GmbH
Boul. Sitniakovo 79 • BG-1111 Sofia
Tel. +35 9 / 2 9 46 14 59 • Fax +35 9 / 2 9 46 12 05
info@rothenberger.bg • www.rothenberger.bg

Chile ROTHENBERGER Chile Limitada
Santo Domingo, 1160 Piso 11 • Oficina 1101
Cl.-Santiago de Chile
Tel. +56 253 964 00 • Fax +56 253 964 00
ventas.chile@rothenberger.es

China ROTHENBERGER Pipe Tool (Shanghai) Co., Ltd.
D-4, No.195 Qianpu Road,East New Area of Songjiang
CN-201611 Shanghai (Industrial Zone)
Tel. +86 21 / 67 60 20 77 • +86 21 / 67 60 20 61
Fax +86 21 / 67 60 20 63 • office@rothenberger.cn

Czech Republic ROTHENBERGER CZ
Prumyslova 1306/7 • CZ-102 00 Praha 10
Tel. +4202 / 71 73 01 83 • Fax +4202 / 6731 01 87
info@rothenberger.cz • www.rothenberger.cz

Denmark ROTHENBERGER Scandinavia A/S
Smedevænget 8 • DK-9560 Hadsund
Tel. +45 98 / 15 75 66 • Fax +45 98 / 15 68 23
roscan@rothenberger.dk

France ROTHENBERGER France S.A.
24, Rue des Drapiers, BP 45033 • FR-57071 Metz Cedex 3
Tel. +33 3 / 87 74 05 92 • Fax + 33 3 / 87 74 94 03
info-fr@rothenberger.com

Germany ROTHENBERGER Deutschland GmbH
Industriestraße 7 • DE-65779 Kelkheim
Tel. +49 6195 / 800 81 00 • Fax +49 6195 / 800 37 39
verkauf-deutschland@rothenberger.com

ROTHENBERGER Werkzeuge Produktion GmbH
Lilienthalstraße 71- 87 • DE-37235 Hessisch-Lichtenau
Tel. +49 56 02 / 93 94-0 • Fax +49 56 02 / 93 94 36

Greece ROTHENBERGER Hellas S.A.
Agias Kyriakis 45 • GR-17564 Paleo Faliro
Tel. +30 210 / 94 02 049 • +30 210 / 94 07 302 / 3
Fax +30 210 / 94 07 322
ro-he@otenet.gr • www.rothenberger.com

Hungary ROTHENBERGER Hungary Kft.
Gubacsi út 26 • HU-1097 Budapest
Tel. +36 1 / 3 47- 50 40 • Fax +36 1 / 3 47 - 50 59
info@rothenberger.hu

India ROTHENBERGER India Private Limited
B-1/D-5, Ground Floor, Mohan Cooperative Industrial Estate,
Mathura Road, IN-110044 New Delhi
Tel. +91 11 / 41 69 90 40, 41 69 90 50 •
Fax +91 11 / 41 69 90 30
contactus@rothenbergerindia.com

Italy ROTHENBERGER Italiana s.r.l.
Via G. Reiss Romoli 17 - 19 • IT-20019 Settimo Milanese
Tel. +39 02 / 33 50 601 • Fax +39 02 / 33 50 01 51
rothenberger@rothenberger.it • www.rothenberger.it

Netherlands ROTHENBERGER Nederland bv
Postbus 45 • NL-5120 AA Rijen
Tel. +31 161 / 29 35 79 • Fax +31 161 / 29 39 08
info@rothenberger.nl • www.rothenberger.nl

Poland ROTHENBERGER Polska Sp.z.o.o.
Ul. Annopol 4A • Budynek C • PL-03-236 Warszawa
Tel. +48 22 / 2 13 59 00 • Fax +48 22 / 2 13 59 01
biuro@rothenberger.pl • www.rothenberger.pl

South Africa ROTHENBERGER-TOOLS SA (PTY) Ltd.
P.O. Box 4360 • Edenvale • 1610
165 Vanderbijl Street, Meadowdale • Germiston
ZA- Gauteng (Johannesburg)
Tel. +27 11 / 3 72 96 33 • Fax +27 11 / 3 72 96 32
info@rothenberger-tools.co.za • www.rothenberger.co.za

Spain ROTHENBERGER S.A.
Ctra. Durango-Elorrio, Km 2 • ES-48220 Abadiano (Vizcaya)
Tel. +34 94 / 6 21 01 00 • Fax +34 94 / 6 21 01 31
export@rothenberger.es • www.rothenberger.es

Switzerland ROTHENBERGER Schweiz AG
Herostr. 9 • CH-8048 Zürich
Tel. +41 44 / 435 30 30 • Fax +41 44 / 401 06 08
info@rothenberger-werkzeuge.ch

Turkey ROTHENBERGER Tes. Alet ve Mak. San. Tic. Ltd. Sti
Poyraz Sok. No: 20/3 - Detay Is Merkezi
TR-34722 Kadiköy-Istanbul
Tel. +90 216 / 449 24 85 • Fax +90 216 / 449 24 87
rothenberger@rothenberger.com.tr

UAE ROTHENBERGER Middle East FZCO
Jebel Ali Free Zone • UAE-261190 Dubai
Tel. +971 4 / 8 83 97 77 • Fax +971 4 / 8 83 97 57
office@rothenberger.ae

UK ROTHENBERGER UK Limited
2 Kingsthorne Park • Henson Way
UK-NN16 8PX Kettering (Northants)
Tel. +44 15 36 / 31 03 00 • Fax +44 15 36 / 31 06 00
info@rothenberger.co.uk

USA ROTHENBERGER USA LLC
4455 Boeing Drive • US-IL 61109-2988 Rockford
Phone +1 815 / 397 7617 • Fax +1 815 / 397 6174
pipetools@rothenberger-usa.com •
www.rothenberger-usa.com

ROTHENBERGER USA Inc.
Western Regional Office • 955 Monterey Pass Road
US-CA 91754 Monterey Park
Phone +1 323 / 268 1381 • Fax +1 323 / 260 4971
pipetools@rothenberger-usa.com •
www.rothenberger-usa.com

ROTHENBERGER Agency

Russia ROTHENBERGER Russia
Avtosavodskaya str. 25
RU-115280 Moscow
Tel. +7 495 / 792 59 44 • Fax +7 495 / 792 59 46
info@rothenberger.ru • www.rothenberger.ru

Romania ROWALT S.R.L.
1 Mai Str., No. 4
RO-75100 Otopeni-Ilfov
Tel. +40 21 / 350 37 44 • +40 21 / 350 37 45
Fax +40 21 / 350 37 46
info@rothenberger.ro • www.rothenberger.ro

ROTHENBERGER Werkzeuge GmbH
Industriestraße 7
D-65779 Kelkheim/Germany
Telefon + 49 (0) 6195 / 800 - 0
Telefax + 49 (0) 6195 / 800 - 3500
info@rothenberger.com

H81911-I/F&E

www.rothenberger.com

ROTHENBERGER

DOUBLE FLARING TOOL

DOUBLE FLARING TOOL

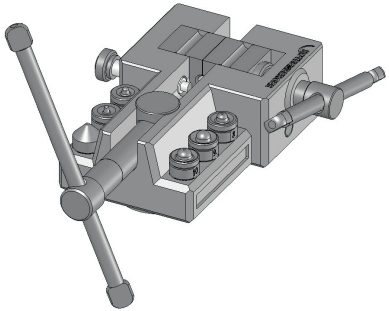

Bedienungsanleitung
Instructions for use
Instruction d'utilisation
Instrucciones de uso
Istruzioni d'uso
Gebruiksaanwijzing
Instruções de serviço
Brugsanvisning
Bruksanvisning
Инструкция по использованию

2.6013

www.rothenberger.com

1

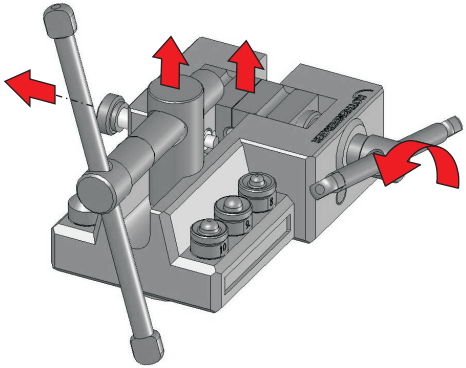

2

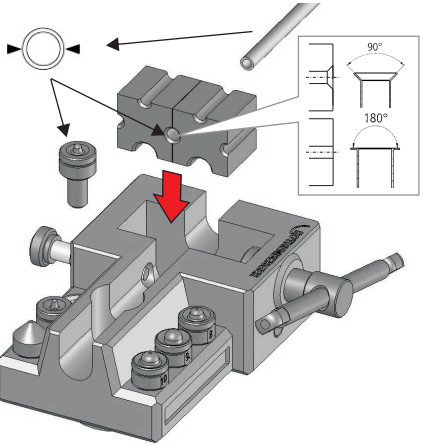

3

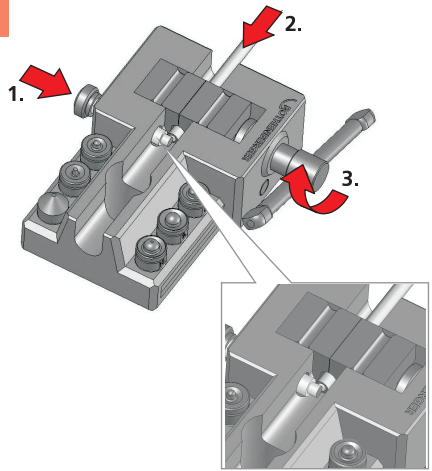

4

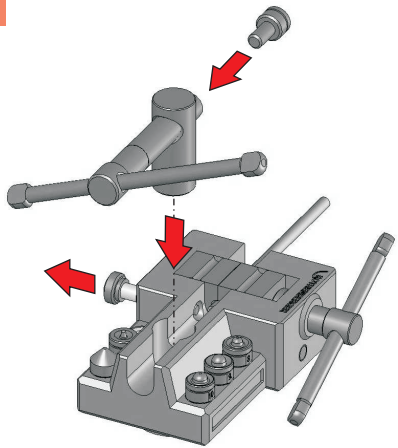

5

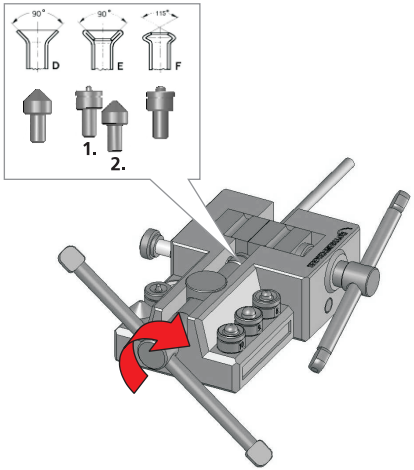

6

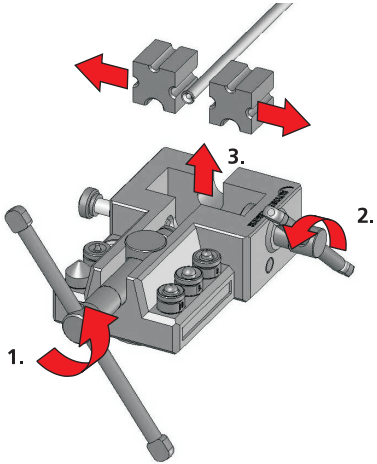

ROTHENBERGER